EXPLODED DRAWING—Model No. GZFW2031.4

R0207A

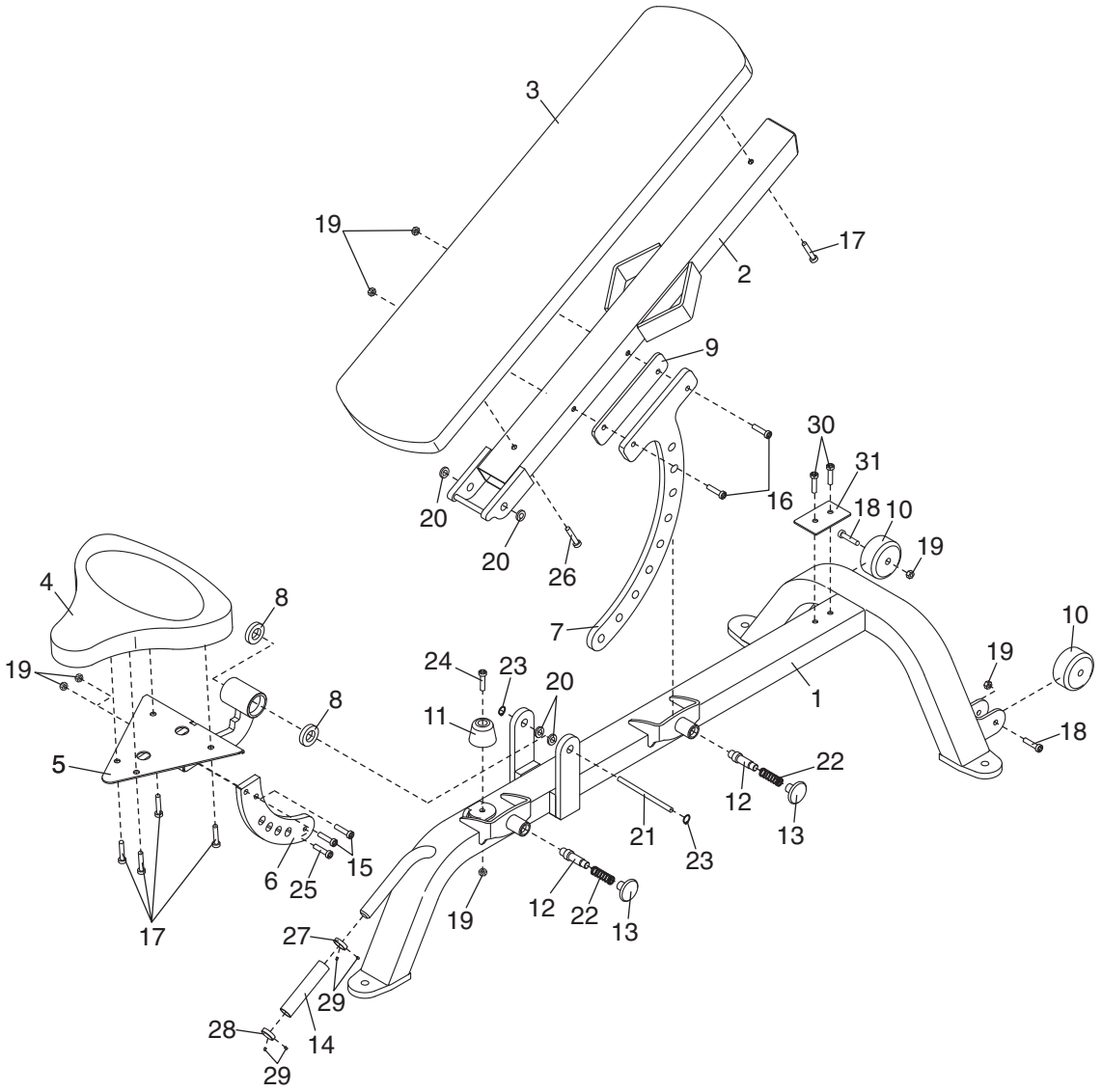

Bubble #	OEM Number	Description
3	GZ5108-10	BACKREST
4	GZ5108-25	SEAT
10	GZ1112	WHEEL
12	GZ3352	ADJUSTMENT PIN
13	GZ3350	ADJUSTMENT KNOB
14	GZ1732	HAND GRIP
15	GZ1014-02	3/8" X 3" BOLT
17	GZ1014-01	3/8" X 1" NON-PATCH BOLT
18	GZ1013-13	3/8" X 2 3/4" BOLT
19	GZ1007	3/8" NYLON LOCKNUT
22	285751	SPRING
23	GZ1018-05	5/8" RETAINER RING
24	GZ1014-03	3/8" X 4" BOLT
25	GZ1013-15	3/8" X 1/2" BOLT
26	GZ1014-02	3/8" X 3" NON-PATCH BOLT
30	144985	#8 SELF-TAP SCREW
#	GZ7350	USER'S MANUAL
11A	GZ1111	LARGE BUMPER
11B	142324	BUMPER